Copyright illunis LLC
All rights reserved. This material contains CONFIDENTIAL INFORMATION that is the property of illunis LLC. Any use, duplication or disclosure not specifically authorized in writing by illunis LLC is prohibited.

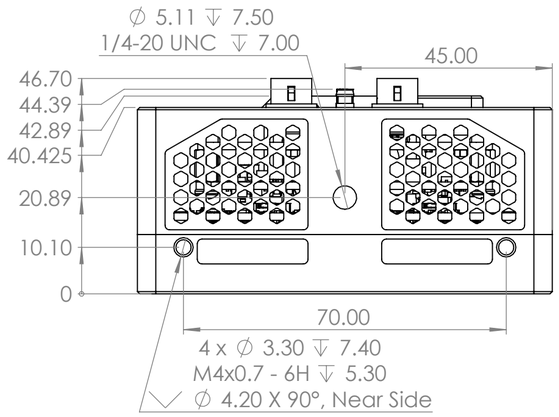

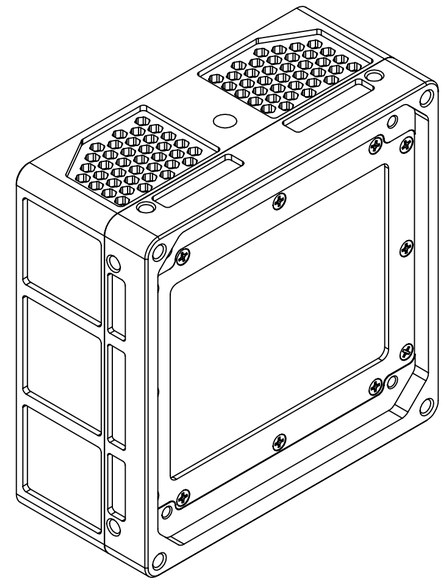

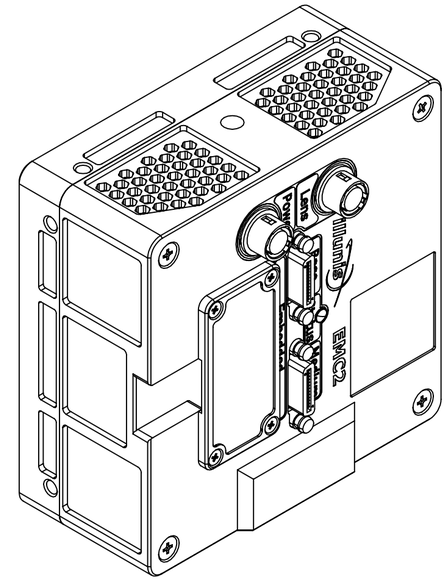

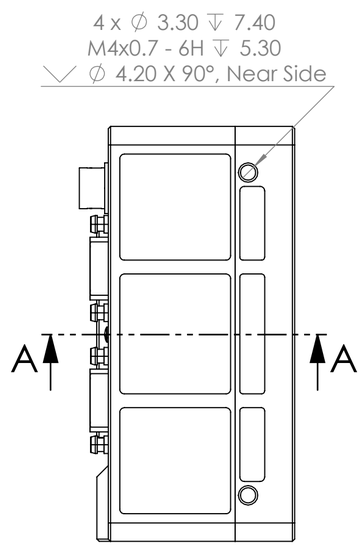

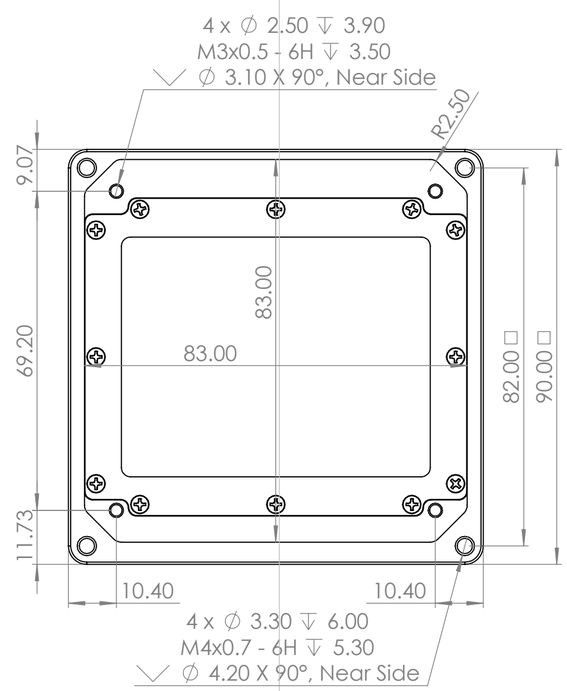

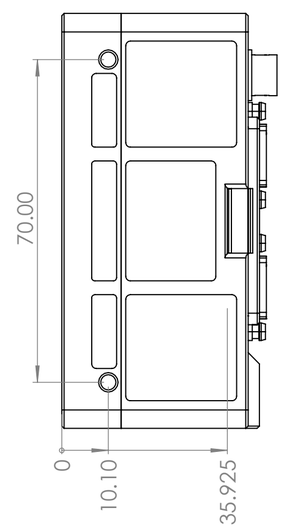

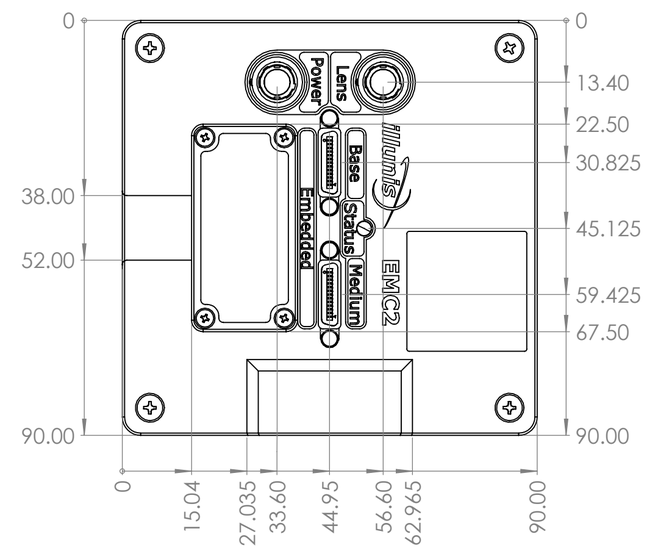

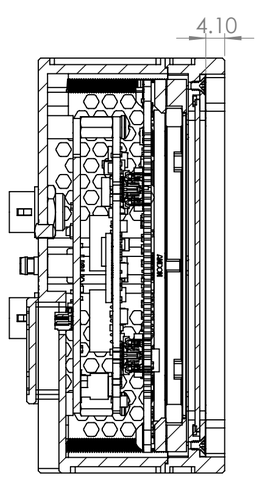

SECTION A-A

SCALE 1 : 1

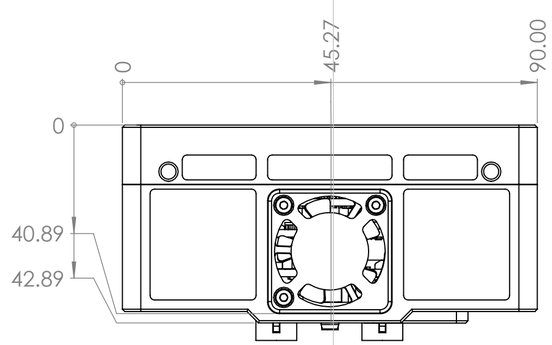

UNLESS OTHERWISE SPECIFIED DIMENSIONS ARE IN mm [in]
TOLERANCES ARE:

DIMENSIONED ANGLES ± 0.5°

DECIMAL mm	DECIMALS in
0-30 ± .1	.X ± .020
31-120 ± .2	.XX ± .010
121-350 ± .4	.XXX ± .005
351-1000 ± .8	

MACHINING REQUIREMENTS:
EDGE BREAKS TO BE 0.2mm [0.015in] MAX
REMOVE ALL BURRS AND SHARP EDGES

MATERIAL

DO NOT SCALE DRAWING

	BY	DATE
DESIGNED:	ADK	3/22/23
DRAWN:	ADK	3/22/23
CHECKED:	ADK	3/22/23

illunis
www.illunis.com

illunis LLC
14700 Excelsior Blvd
Minnetonka, MN 55345
952-975-9203

TITLE:

EMC2-152 SCL EPIX No Mount

SIZE	PART NO.	REV
C	52-03569	

SCALE: 1:2 | MASS: (gm) | SHEET 1 OF 1